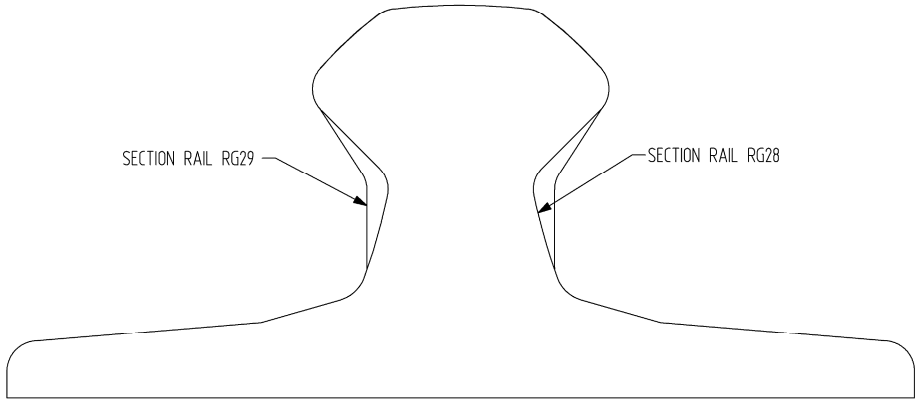

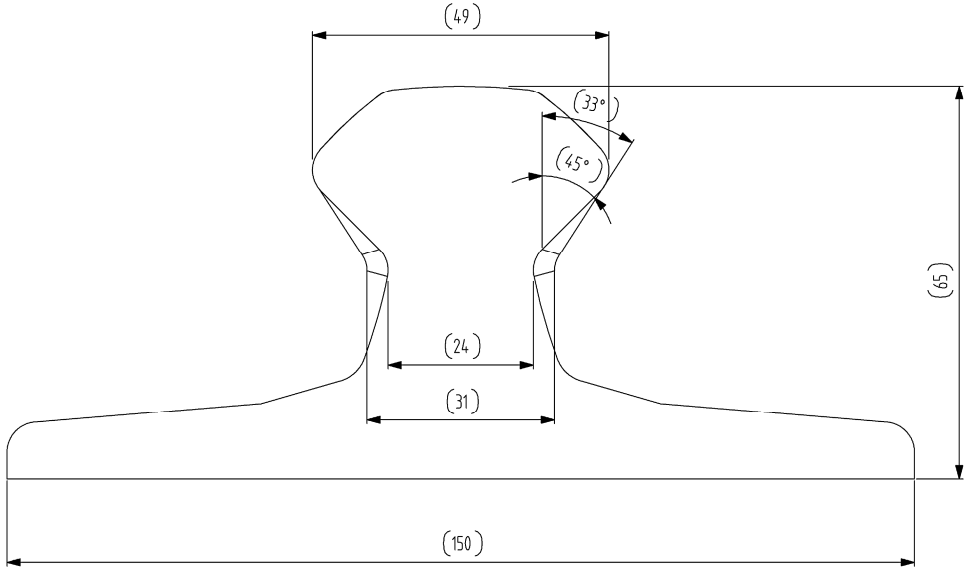

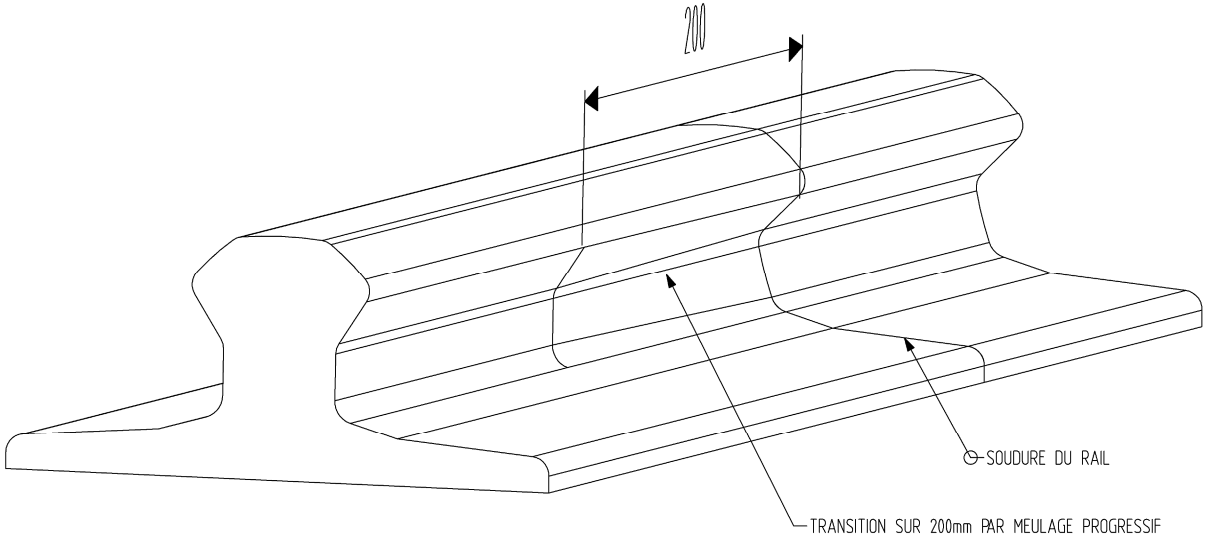

Art. Indice	Tra.	N° Ev. N° Modif.	Evolution Modification	Dessine Drawn	Date	Verifie Checked	Date
-	-		CREATION PLAN	BISANTZ	07/06/10		

Matiere *Material* Ø

Traitement *Treatement*

Protection

Ce dessin est notre propriete exclusive; il ne peut etre ni copie ni communique a des tiers sans autorisation.
LOHR copyright. This drawing is not to be divulgated to any third person without authorization.

LOHR INDUSTRIE

Designation: SOUDAGE RAILS RG29 - RG28

Masse *Weight*	Echelle *Scale*	Code OTAN *NATO Code*	Reference	Indice/*Rev* Art.	Indice/*Rev* Tra./*Draw.*	Planche/*Sheet*	Format/*Size*
kg		F6432	F00408163	-	-	1/1	A2